GATE-2014

Question Paper

&

Answer Keys

Index

1. Question Paper Analysis
2. Question Paper & Answer keys

ANALYSIS OF GATE 2014
Electrical Engineering

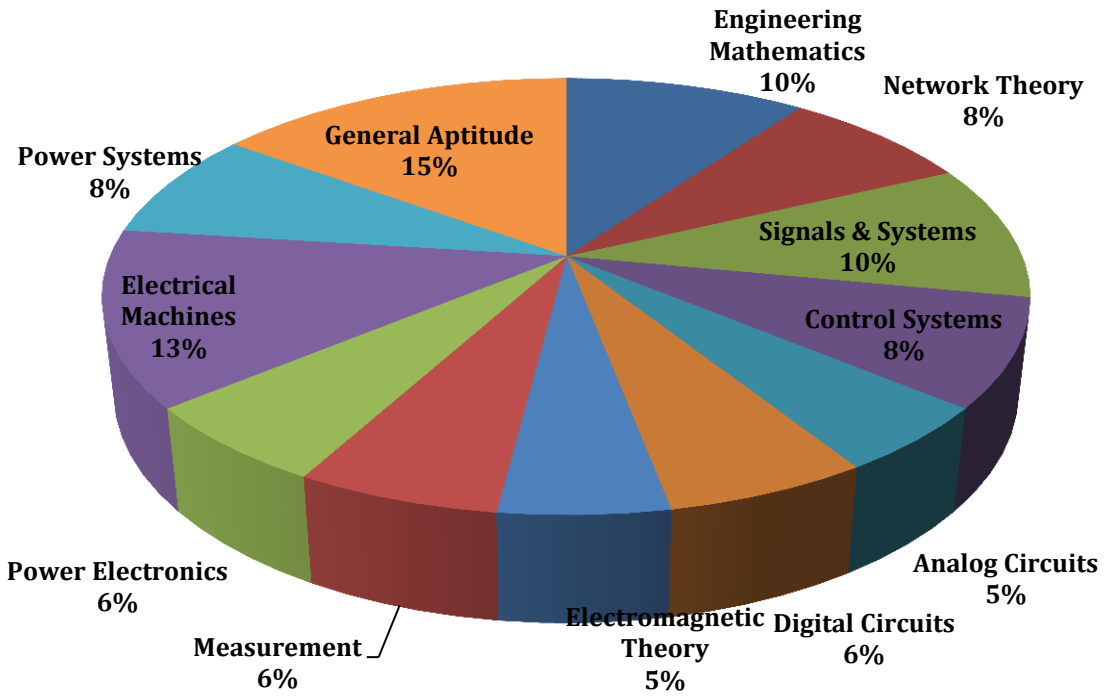

GATE-2014- EE

SUBJECT	NO OF QUESTION	Topics Asked in Paper	Total Marks
Engineering Mathematics	1M:4 2M:3	Linear Algebra; Probability & distribution Numerical Method; Calculus Differential Equations Complex Variables	10
Network Theory	1M:2 2M:3	Network Solution Methodology Sinusoidal Steady State Analysis	8
Signals & Systems	1M:4 2M:3	Introduction to S&S Linear Time Invariant System Fourier Representation of Signals Frequency response of LTI systems	10
Control Systems	1M:2 2M:3	Basics of Control System Stability & Routh Hurwitz Criterion Frequency response Analysis using bode plot State Variable Analysis	8
Analog Circuits	1M:1 2M:2	Feedback Oscilator Circuit Operational Amplifiers And Its Applications	5
Digital Circuits	1M:2 2M:2	Combinational Digital Circuit Sequential Circuits Microprocessor	6
Electromagnetic Theory	1M:1 2M:2	Electric & Magnetic field Transmission Line	5
Measurement	1M:2 2M:2	Measurement of Basic Electrical Quantities-1 Measurement of Basic Electrical Quantities-2 Electronic measuring Instrument-1	6
Power Electronics	1M:0 2M:3	Basics of power semiconductor devices Phase control rectifier Inverters	6
Electrical Machines	1M:3 2M:5	Transformers DC Machine Induction motors Synchronous Machine	13
Power Systems	1M:4 2M:2	Transmission and Distribution, Power System and Stability	8
General Aptitude	1M:5 2M:5	Numerical Ability Verbal Ability	15
Total	**65**		**100**

www.thegateacademy.com

All India GATE 2014

Electrical Engineering (Set – 3)

Q.1 - Q.25 Carry One Mark each.

1. Two matrices A and B are given below:

$A = \begin{bmatrix} p & q \\ r & s \end{bmatrix}$; $B = \begin{bmatrix} p^2 + q^2 & pr + qs \\ pr + qs & r^2 + s^2 \end{bmatrix}$

If the rank of matrix A is N, then the rank of matrix B is

(A) N /2 (B) N − 1 (C) N (D) 2 N

[Ans. C]

2. A particle, starting from origin at t = 0 s, is traveling along x-axis with velocity

$v = \frac{\pi}{2}\cos\left(\frac{\pi}{2}t\right)$ m/s

At t = 3 s, the difference between the distance covered by the particle and the magnitude of displacement from the origin is _____

[Ans. *] Range 2 to 2

3. Let $\nabla.(fv) = x^2y + y^2z + z^2x$, where f and v are scalar and vector fields respectively. If $v = yi + zj + xk$, then $v.\nabla f$ is

(A) $x^2y + y^2z + z^2x$
(B) $2xy + 2yz + 2zx$
(C) $x + y + z$
(D) 0

[Ans. A]

4. Lifetime of an electric bulb is a random variable with density $f(x) = kx^2$, where x is measured in years. If the minimum and maximum lifetimes of bulb are 1 and 2 years respectively, then the value of k is_____

[Ans. *] Range 0.4 to 0.5

5. A function f(t) is shown in the figure.

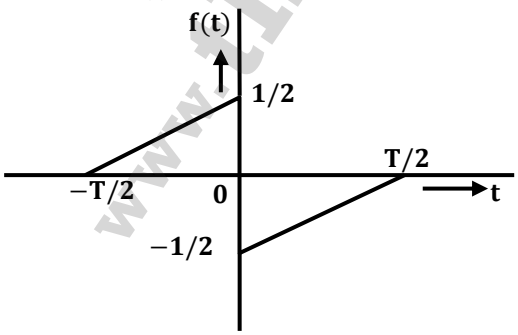

The Fourier transform F(ω)of f(t) is

(A) real and even function of ω.
(B) real and odd function of ω.
(C) imaginary and odd function of ω.
(D) imaginary and even function of ω.

[Ans. C]

www.thegateacademy.com

6. The line A to neutral voltage is $10\angle 15°$ V for a balanced three phase star-connected load with phase sequence ABC. The voltage of line B with respect to line C is given by

(A) $10\sqrt{3}\angle 105°$ V
(B) $10\angle 105°$ V
(C) $10\sqrt{3}\angle -75°$ V
(D) $-10\sqrt{3}\angle 90°$ v

[Ans. C]

7. A hollow metallic sphere of radius r is kept at potential of 1 Volt. The total electric flux coming out of the concentric spherical surface of radius R (> r) is

(A) $4\pi\varepsilon_0 r$
(B) $4\pi\varepsilon_0 r^2$
(C) $4\pi\varepsilon_0 R$
(D) $4\pi\varepsilon_0 R^2$

[Ans. A]

8. The driving point impedance Z(s) for the circuit shown below is

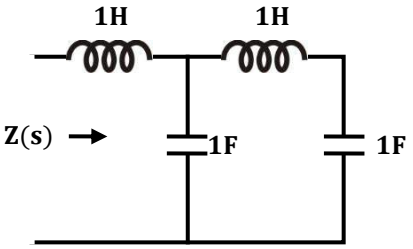

(A) $\dfrac{s^4+3s^2+1}{s^3+2s}$
(B) $\dfrac{s^4+2s^2+4}{s^2+2}$
(C) $\dfrac{s^2+1}{s^4+s^2+1}$
(D) $\dfrac{s^3+1}{s^4+s^2+1}$

[Ans. A]

9. A signal is represented by

$$x(t) = \begin{cases} 1 & |t| < 1 \\ 0 & |t| > 1 \end{cases}$$

The Fourier transform of the convolved signal $y(t) = x(2t) * x(t/2)$ is

(A) $\dfrac{4}{\omega^2}\sin\left(\dfrac{\omega}{2}\right)\sin(2\omega)$
(B) $\dfrac{4}{\omega^2}\sin\left(\dfrac{\omega}{2}\right)$
(C) $\dfrac{4}{\omega^2}\sin(2\omega)$
(D) $\dfrac{4}{\omega^2}\sin^2\omega$

[Ans. A]

10. For the signal $f(t) = 3\sin 8\pi t + 6\sin 12\pi t + \sin 14\pi t$,the minimum sampling frequency (in Hz) satisfying the Nyquist criterion is

[Ans. *] Range 14 to 14

11. In a synchronous machine, hunting is predominantly damped by

(A) mechanical losses in the rotor
(B) iron losses in the rotor
(C) copper losses in the stator
(D) copper losses in the rotor

[Ans. D]

12. A single phase induction motor is provided with capacitor and centrifugal switch in series with auxiliary winding. The switch is expected to operate at a speed of 0.7 Ns, but due to malfunctioning the switch fails to operate. The torque-speed characteristic of the motor is represented by

www.thegateacademy.com

(A)

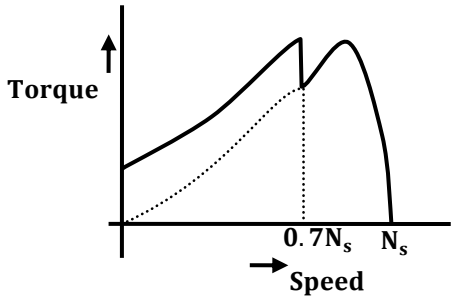

(C)

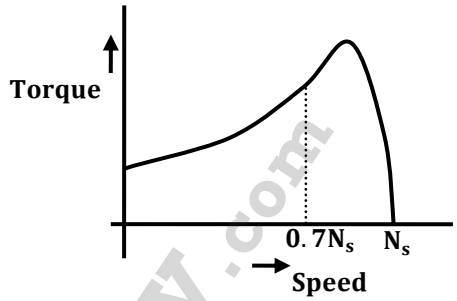

(B)

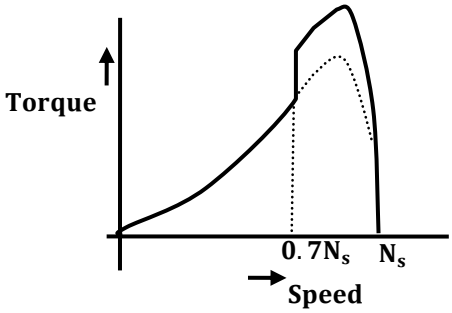

(D)

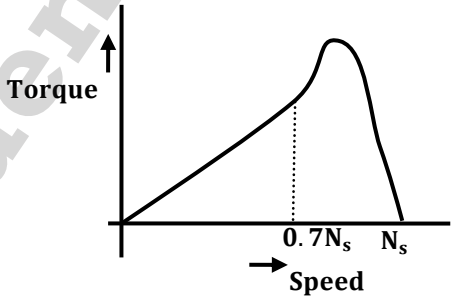

[Ans. C]

13. The no-load speed of a 230 V separately excited dc motor is 1400 rpm. The armature resistance drop and the brush drop are neglected. The field current is kept constant at rated value. The torque of the motor in Nm for an armature current of 8 A is _____
[Ans. *] Range 12.45 to 12.65

14. In a long transmission line with r,l,g and c are the resistance, inductance, shunt conductance and capacitance per unit length, respectively, the condition for distortionless transmission is
(A) $rc = lg$
(B) $r = \sqrt{l/c}$
(C) $rg = lc$
(D) $g = \sqrt{c/l}$
[Ans. A]

15. For a fully transposed transmission line
(A) positive, negative and zero sequence impedances are equal
(B) positive and negative sequence impedances are equal
(C) zero and positive sequence impedances are equal
(D) negative and zero sequence impedances are equal
[Ans. B]

16. A 183-bus power system has 150 PQ buses and 32 PV buses. In the general case, to obtain the load flow solution using Newton-Raphson method in polar coordinates, the minimum number of simultaneous equations to be solved is_____
[Ans. *] Range 332 to 332

www.thegateacademy.com

17. The signal flow graph of a system is shown below. U(s)is the input and C(s)is the output.

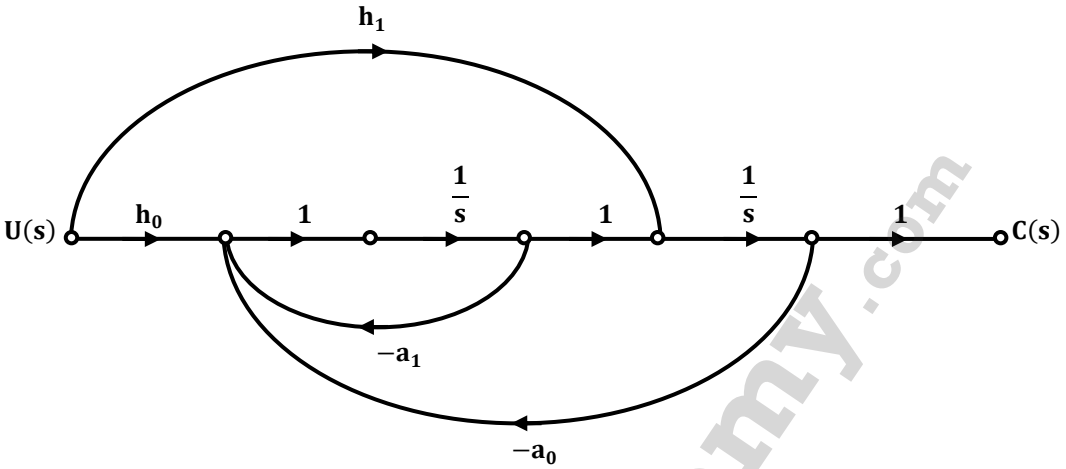

Assuming $h_1 = b_1$ and $h_O = b_0 - b_1 a_1$, the input-output transfer function $G(s) = \frac{C(s)}{U(s)}$ of the system is given by

(A) $G(s) = \dfrac{b_0 s + b_1}{s^2 + a_0 s + a_1}$

(B) $G(s) = \dfrac{a_1 s + a_0}{s^2 + b_1 s + b_0}$

(C) $G(s) = \dfrac{b_1 s + b_0}{s^2 + a_1 s + a_0}$

(B) $G(s) = \dfrac{a_0 s + a_1}{s^2 + b_0 s + b_1}$

[Ans. C]

18. A single-input single-output feedback system has forward transfer function G(s) and feedback transfer function H(s). It is given that $|G(s)H(s)| < 1$. Which of the following is true about the stability of the system?

(A) The system is always stable

(B) The system is stable if all zeros of G(s)H(s) are in left half of the s-plane

(C) The system is stable if all poles of G(s)H(s) are in left half of the s-plane

(D) It is not possible to say whether or not the system is stable from the information given

[Ans. A]

19. An LPF wattmeter of power factor 0.2 is having three voltage settings 300 V, 150 V and 75 V, and two current settings 5 A and 10 A. The full scale reading is 150. If the wattmeter is used with 150 V voltage setting and 10 A current setting, the multiplying factor of the wattmeter is_____

[Ans. *] Range 2 to 2

20. The two signals S1 and S2, shown in figure, are applied to Y and X deflection plates of an oscilloscope.

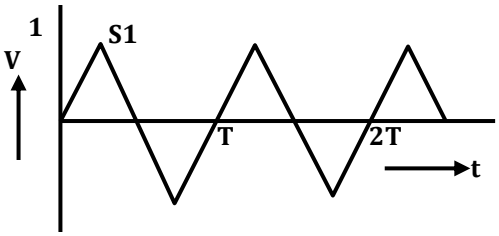

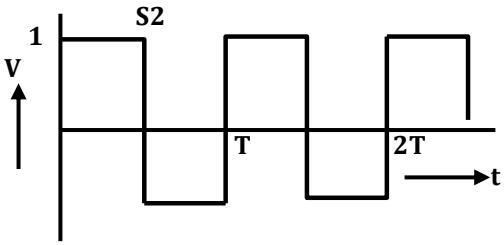

The waveform displayed on the screen is

(A)

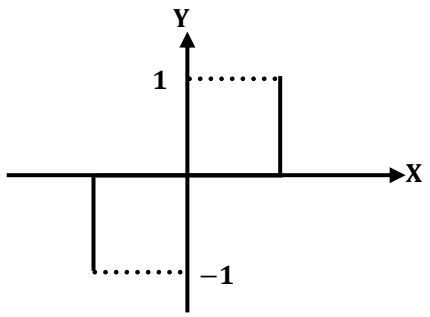

(C)

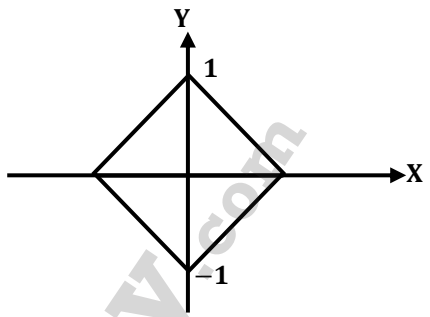

(B)

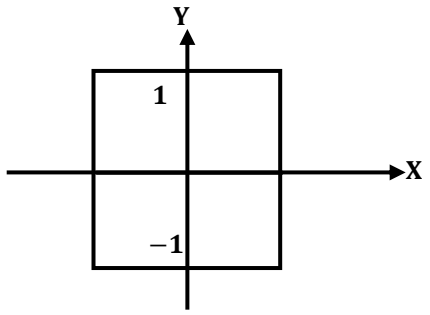

(D)

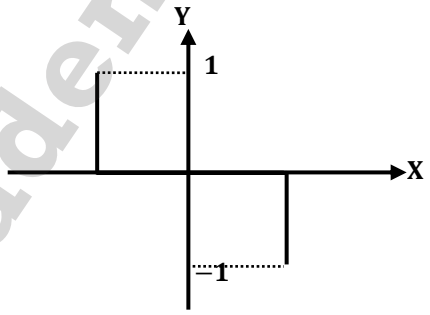

[Ans. A]

21. A state diagram of a logic gate which exhibits a delay in the output is shown in the figure, where X is the don't care condition, and Q is the output representing the state.

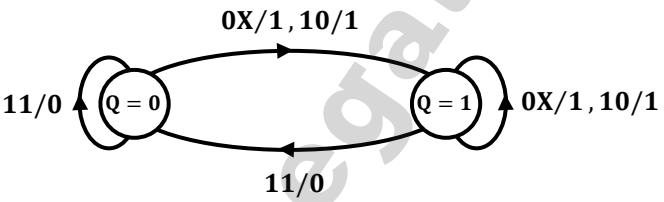

The logic gate represented by the state diagram is

(A) XOR (B) OR (C) AND (D) NAND

[Ans. D]

22. An operational-amplifier circuit is shown in the figure.

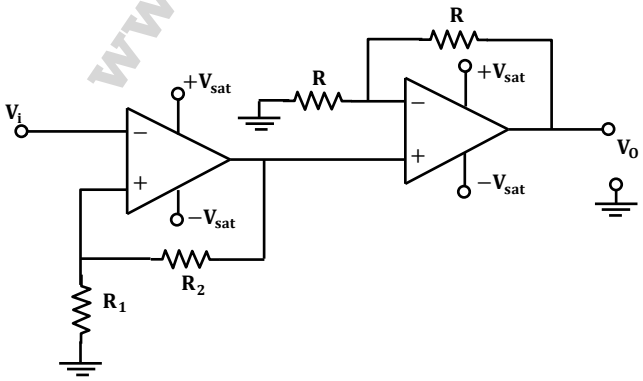

The output of the circuit for a given input V_i is

(A) $-\left(\frac{R_2}{R_1}\right)V_i$

(B) $-\left(1+\frac{R_2}{R_1}\right)V_i$

(C) $\left(1+\frac{R_2}{R_1}\right)V_i$

(D) $+V_{sat}$ or $-V_{sat}$

[Ans. D]

23. In 8085A microprocessor, the operation performed by the instruction LHLD 2100_H is

(A) $(H) \leftarrow 21_H, (L) \leftarrow 00_H$

(B) $(H) \leftarrow M(2100_H), (L) \leftarrow M(3101_H)$

(C) $(H) \leftarrow M(2101_H), (L) \leftarrow M(2100_H)$

(D) $(H) \leftarrow 00_H, (L) \leftarrow 21_H$

[Ans. C]

24. A non-ideal voltage source V_s has an internal impedance of Z_s. If a purely resistive load is to be chosen that maximizes the power transferred to the load, its value must be

(A) 0

(B) real part of Z_s

(C) magnitude of Z_s

(D) complex conjugate of Z_s

[Ans. C]

25. The torque-speed characteristics of motor (T_M) and load (T_L) for two cases are shown in the figures (a) and (b). The load torque is equal to motor torque at points P, Q, R and S

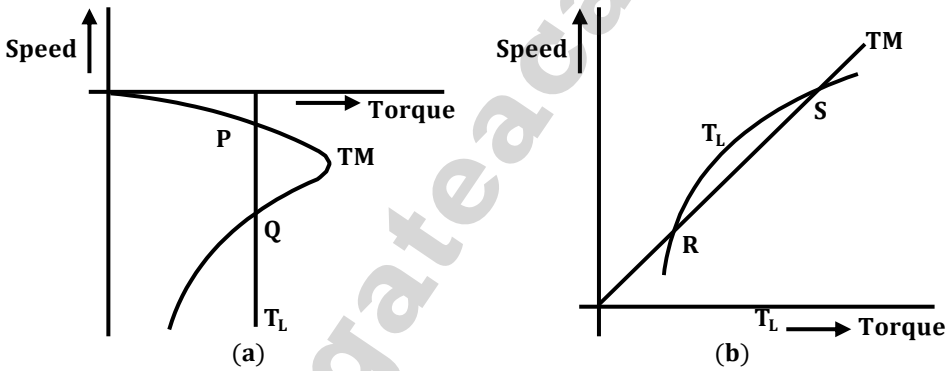

The stable operating points are

(A) P and R

(B) P and S

(C) Q and R

(D) Q and S

[Ans. B]

Q.26 - Q.55 Carry Two Marks each.

26. Integration of the complex function $f(z) = \frac{z^2}{z^2-1}$, in the counterclockwise direction, around $|z-1| = 1$, is

(A) $-\pi i$ (B) 0 (C) πi (D) $2\pi i$

[Ans. C]

27. The mean thickness and variance of silicon steel laminations are 0.2 mm and 0.02 respectively. The varnish insulation is applied on both the sides of the laminations. The mean thickness of one side insulation and its variance are 0.1 mm and 0.01 respectively. If the transformer core is made using 100 such varnish coated laminations, the mean thickness and variance of the core respectively are

(A) 30 mm and 0.22

(B) 30 mm and 2.44

(C) 40 mm and 2.44

(D) 40 mm and 0.24

[Ans. D]

28. The function $f(x) = e^x - 1$ is to be solved using Newton-Raphson method. If the initial value of x_0 is taken as 1.0, then the absolute error observed at 2nd iteration is _____
[Ans. *] Range 0.05 to 0.07

29. The Norton's equivalent source in amperes as seen into the terminals X and Y is _____

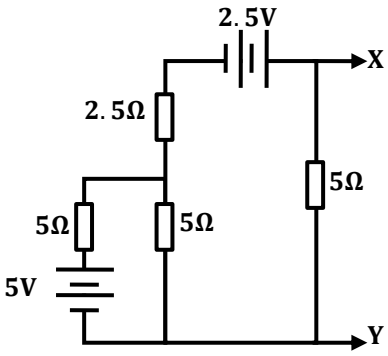

[Ans. *] Range 2 to 2

30. The power delivered by the current source, in the figure, is_____

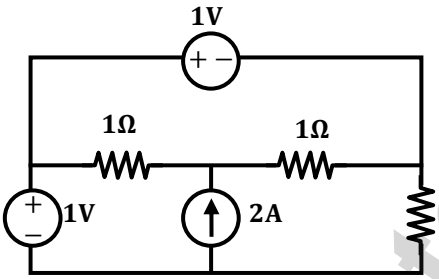

[Ans. *] Range 3 to 3

31. A perfectly conducting metal plate is placed in x-y plane in a right handed coordinate system. A charge of $+32\pi\varepsilon_0\sqrt{2}$ columbs is placed at coordinate (0, 0, 2). ε_0 is the permittivity of free space. Assume $\hat{i}, \hat{j}, \hat{k}$ to be unit vectors along x, y and z axes respectively. At the coordinate $(\sqrt{2}, \sqrt{2}, 0)$ the electric field vector $\vec{E}$ (Newtons/Columb) will be

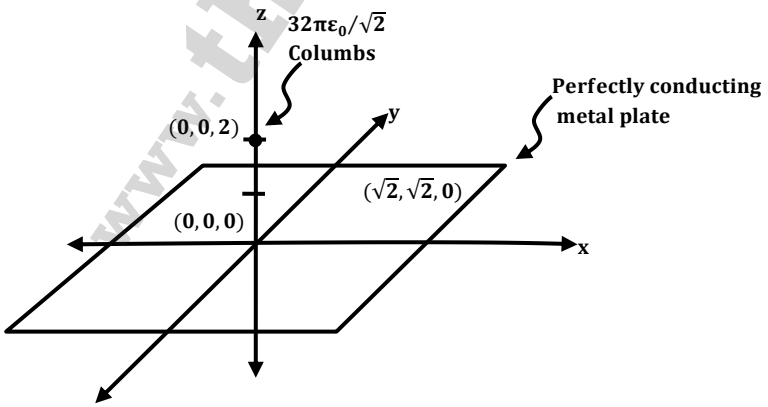

(A) $2\sqrt{2}\hat{k}$ (B) $-2\hat{k}$ (C) $2\hat{k}$ (D) $-2\sqrt{2}\hat{k}$
[Ans. B]

32. A series RLC circuit is observed at two frequencies. At $\omega_1 = 1$ krad/s, we note that source voltage $V_1 = 100\angle 0°$V results in a current $I_1 = 0.03\angle 31°$ A. At $\omega_2 = 2$krad/s, the source voltage $V_2 = 100\angle 0°$V results in a current $I_2 = 2\angle 0°$ A. The closest values for R,L,C out of the following options are

(A) R = 50Ω; L = 25 mH; C = 10μF;
(B) R = 50Ω; L = 10 mH; C = 25μF;
(C) R = 50Ω; L = 50 mH; C = 5μF;
(D) R = 50Ω; L = 5 mH; C = 50 μF;

[Ans. B]

33. A continuous-time LTI system with system function H(ω) has the following pole-zero plot. For this system, which of the alternatives is TRUE?

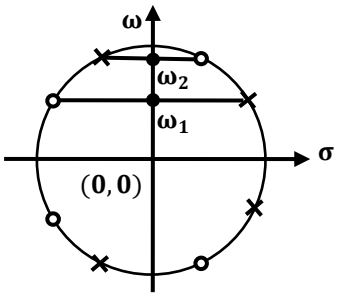

(A) $|H(0)| > |H(\omega)|;\ |\omega| > 0$
(B) $|H(\omega)|$ has multiple maxima, at ω_1 and ω_2
(C) $|H(0)| < |H(\omega)|;\ |\omega| > 0$
(D) $|H(\omega)| =$ constant; $-\infty < \omega < \infty$

[Ans. D]

34. A sinusoid x(t) of unknown frequency is sampled by an impulse train of period 20 ms. The resulting sample train is next applied to an ideal lowpass filter with a cutoff at 25 Hz. The filter output is seen to be a sinusoid of frequency 20 Hz. This means that x(t) has a frequency of

(A) 10 Hz
(B) 60 Hz
(C) 30 Hz
(D) 90 Hz

[Ans. C]

35. A differentiable non constant even function x(t) has a derivative y(t), and their respective Fourier Transforms are X(ω) and Y(ω). Which of the following statements is TRUE?

(A) X(ω) and Y(ω) are both real.
(B) X(ω) is real and Y(ω) is imaginary.
(C) X(ω) and Y(ω) are both imaginary.
(D) X(ω) is imaginary and Y(ω) is real.

[Ans. B]

36. An open circuit test is performed on 50 Hz transformer, using variable frequency source and keeping V/f ratio constant, to separate its eddy current and hysteresis losses. The variation of core loss/frequency as function of frequency is shown in the figure

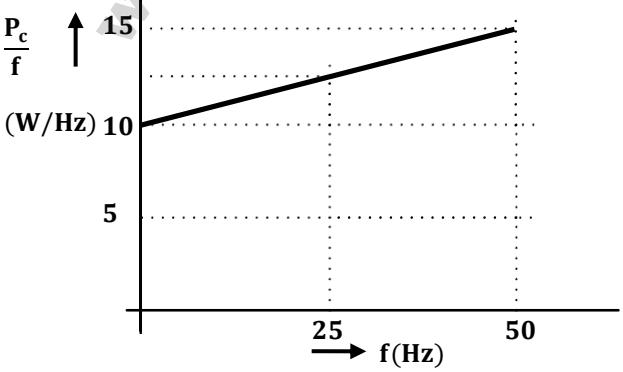

The hysteresis and eddy current losses of the transformer at 25 Hz respectively are

(A) 250 W and 2.5 W
(B) 250 W and 62.5W
(C) 312.5 W and 62.5 W
(D) 312.5 W and 250 W

[Ans. B]

37. A non-salient pole synchronous generator having synchronous reactance of 0.8 pu is supplying 1 pu power to a unity power factor load at a terminal voltage of 1.1 pu. Neglecting the armature resistance, the angle of the voltage behind the synchronous reactance with respect to the angle of the terminal voltage in degrees is _____

[Ans. *] Range 32.4 to 34.0

38. A separately excited 300 V DC shunt motor under no load runs at 900 rpm drawing an armature current of 2 A. The armature resistance is 0.5Ω. and leakage inductance is 0.01 H. When loaded, the armature current is 15 A. Then the speed in rpm is_____

[Ans. *] Range 879 to 881

39. The load shown in the figure absorbs 4 kW at a power factor of 0.89 lagging.

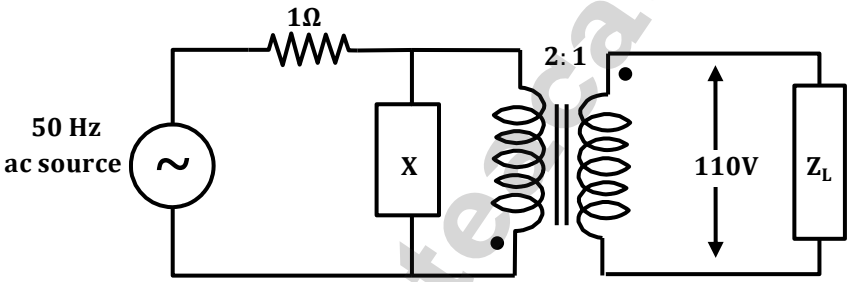

Assuming the transformer to be ideal, the value of the reactance X to improve the input power factor to unity is _____

[Ans. *] Range 23 to 24

40. The parameters measured for a 220V/110V, 50 Hz, single-phase transformer are:
Self inductance of primary winding = 45 mH
Self inductance of secondary winding = 30 mH
Mutual inductance between primary and secondary windings = 20 mH
Using the above parameters, the leakage (L_{l1}, L_{l2}) and magnetizing (L_m) inductances as referred to primary side in the equivalent circuit respectively, are

(A) 5mH, 20mH and 40mH
(B) 5mH, 80mH and 40mH
(C) 25mH, 10mH and 20mH
(D) 45mH, 30mH and 20mH

[Ans. B]

41. For a 400 km long transmission line, the series impedance is (0.0 + J0.5) Ω/km and the shunt admittance is (0.0 + J5.0) μmho/km. The magnitude of the series impedance (in Ω) of the equivalent π circuit of the transmission line is_____

[Ans. *] Range 186 to 188

www.thegateacademy.com

42. The complex power consumed by a constant-voltage load is given by $(P_1 + jQ_1)$, where, 1 kW $\leq$ P1 $\leq$ 1.5 kW and 0.5 kVAR $\leq Q_1 \leq$ 1 kVAR
A compensating shunt capacitor is chosen such that |Q| $\leq$0.25 kVAR, where Q is the net reactive power consumed by the capacitor-load combination. The reactive power (in kVAR) supplied by the capacitor is_____
[Ans. *] Range 0.75 to 0.75

43. The figure shows the single line diagram of a single machine infinite bus system.

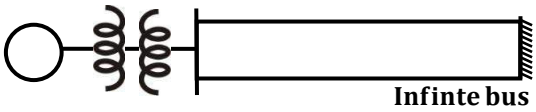

The inertia constant of the synchronous generator H = 5MW-s/MVA. Frequency is 50 Hz. Mechanical power is 1 pu. The system is operating at the stable equilibrium point with rotor angle δ equal to 30°. A three phase short circuit fault occurs at a certain location on one of the circuits of the double circuit transmission line. During fault, electrical power in pu is $P_{max} \sin\delta$. If the values of δ and $d\delta/dt$ at the instant of fault clearing are 45° and 3.762 radian/s respectively, then P_{max} (in pu) is_____
[Ans. *] Range 0.22 to 0.24

44. The block diagram of a system is shown in the figure

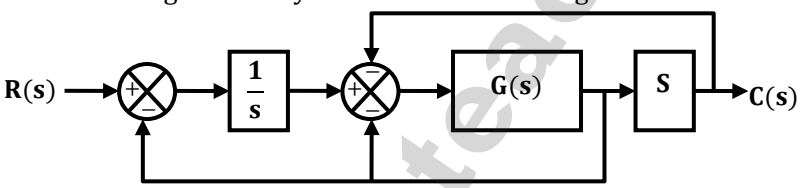

If the desired transfer function of the system is

$$\frac{C(s)}{R(s)} = \frac{s}{s^2 + s + 1}$$

then G(s) is

(A) 1 (B) s (C) 1/s (D) $\frac{-s}{s^3+s^2-s-2}$

[Ans. B]

45. Consider the system described by following state space equations

$$\begin{bmatrix}\dot{x}_1\\ \dot{x}_2\end{bmatrix} = \begin{bmatrix}0 & 1\\ -1 & -1\end{bmatrix}\begin{bmatrix}x_1\\ x_2\end{bmatrix} + \begin{bmatrix}0\\ 1\end{bmatrix}u; \quad y = [1 \quad 0]\begin{bmatrix}x_1\\ x_2\end{bmatrix}$$

If u is unit step input, then the steady state error of the system is

(A) 0 (B) 1/2 (C) 2/3 (D) 1

[Ans. A]

46. The magnitude Bode plot of a network is shown in the figure

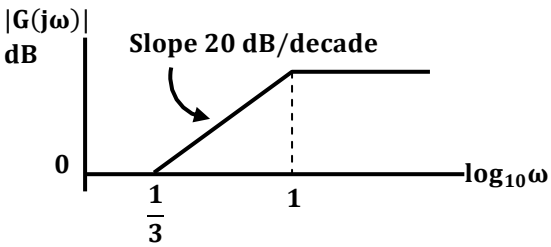

The maximum phase angle ϕ_m and the corresponding gain G_m respectively, are

(A) $-30°$ and 1.73dB
(B) $-30°$ and 4.77dB
(C) $+30°$ and 4.77dB
(D) $+30°$ and 1.73dB

[Ans. C]

47. A periodic waveform observed across a load is represented by

$$V(t) = \begin{cases} 1 + \sin \omega t & 0 \le \omega t < 6\pi \\ -1 + \sin \omega t & 6\pi \le \omega t < 12\pi \end{cases}$$

The measured value, using moving iron voltmeter connected across the load, is

(A) $\sqrt{\frac{3}{2}}$
(B) $\sqrt{\frac{2}{3}}$
(C) $\frac{3}{2}$
(D) $\frac{2}{3}$

[Ans. A]

48. In the bridge circuit shown, the capacitors are loss free. At balance, the value of capacitance C_1 in microfarad is_____

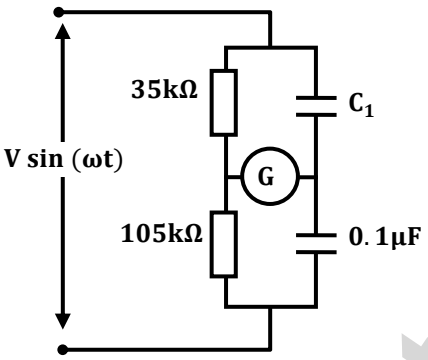

[Ans. *] Range 0.3 to 0.3

49. Two monoshot multivibrators, one positive edge triggered (M_1) and another negative edge triggered (M_2), are connected as shown in figure

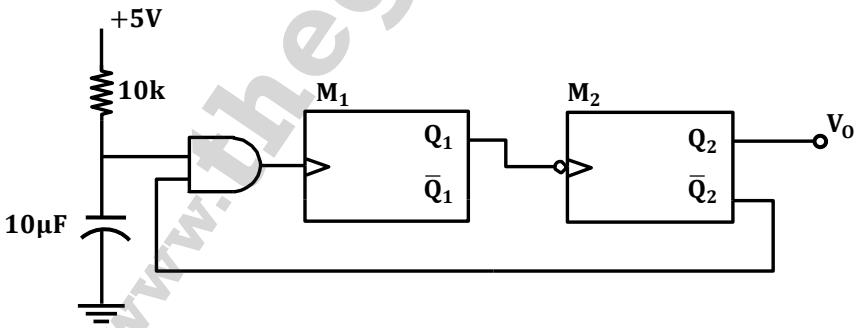

The monoshots M_1 and M_2 when triggered produce pulses of width T_1 and T_2 respectively, where $T_1 > T_2$. The steady state output voltage V_0 of the circuit is

(A)

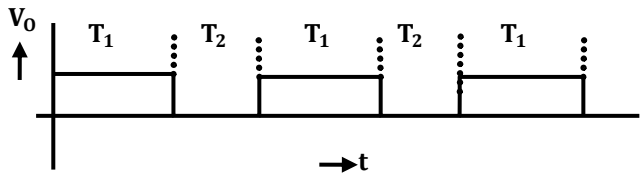

(B)

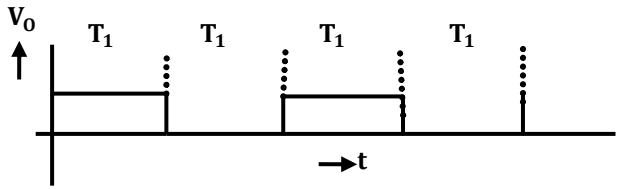

(C)

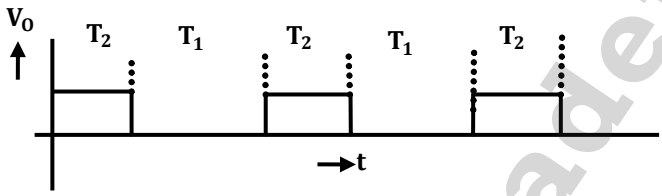

(D)

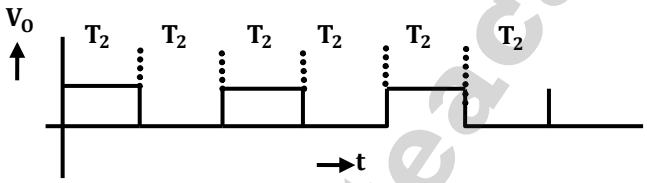

[Ans. C]

50. The transfer characteristic of the Op-amp circuit shown in figure is

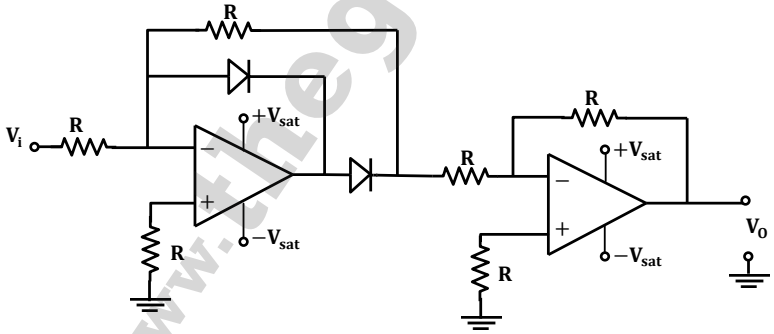

(A)

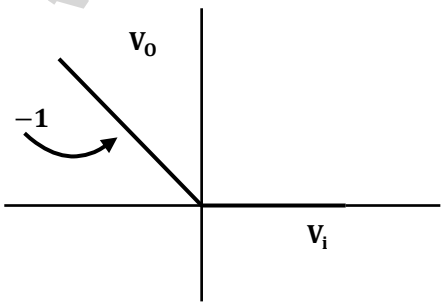

(C)

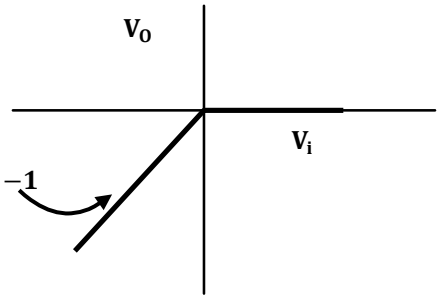

www.thegateacademy.com

(B)

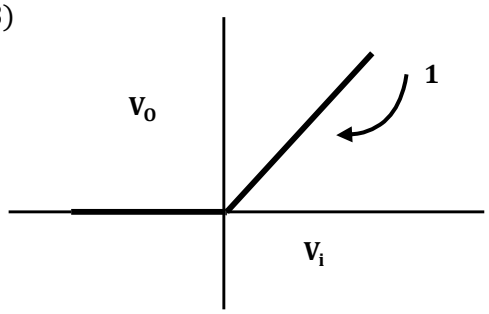

(D)

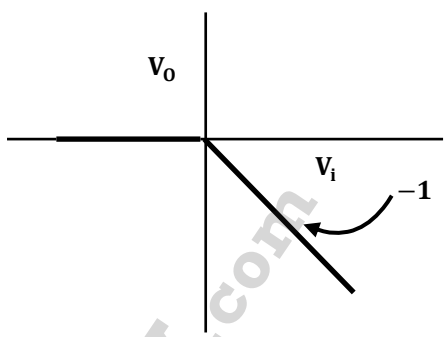

[Ans. C]

51. A 3-bit gray counter is used to control the output of the multiplexer as shown in the figure. The initial state of the counter is 000_2. The output is pulled high. The output of the circuit follows the sequence

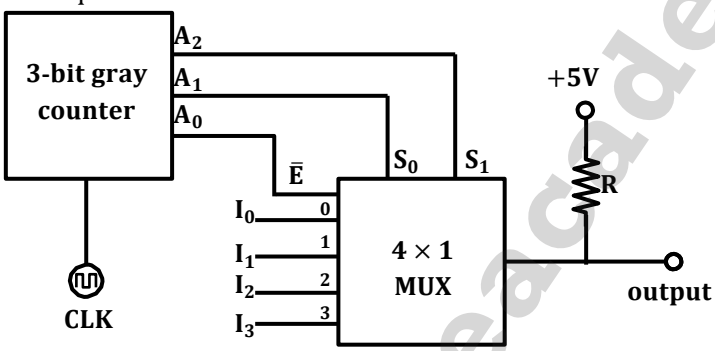

(A) $I_0, 1, 1, I_1, I_3, 1, 1, I_2$

(B) $I_0, 1, I_1, 1, I_2, 1, I_3, 1$

(C) $1, I_0, 1, I_1, I_2, 1, I_3, 1$

(D) $I_0, I_1, I_2, I_3, I_0, I_1, I_2, I_3$

[Ans. A]

52. A hysteresis type TTL inverter is used to realize an oscillator in the circuit shown in the figure.

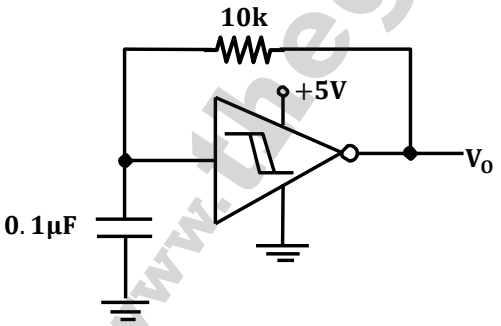

If the lower and upper trigger level voltages are 0.9 V and 1.7 V, the period (in ms), for which output is LOW, is_____

[Ans. *] Range 0.62 to 0.66

53. A three-phase fully controlled bridge converter is fed through star-delta transformer as shown in the figure.

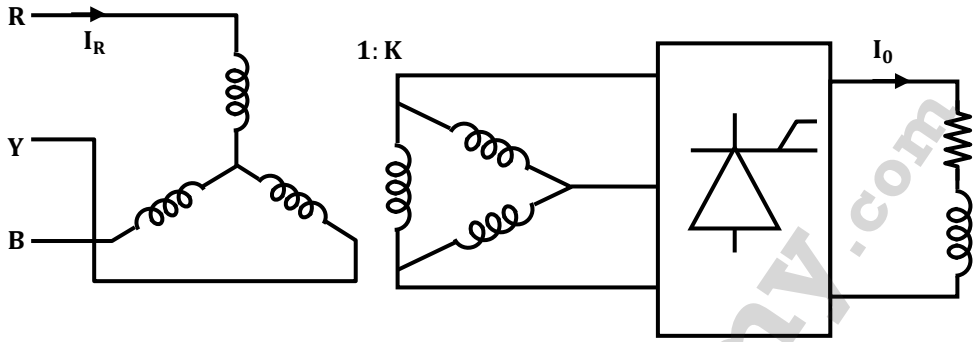

The converter is operated at a firing angle of 30°. Assuming the load current (I_0) to be virtually constant at 1 p.u. and transformer to be an ideal one, the input phase current waveform is

(A)

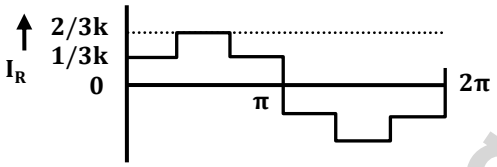

(C)

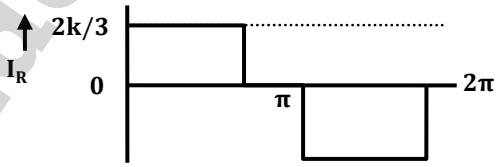

(B)

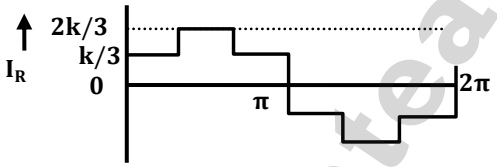

(D)

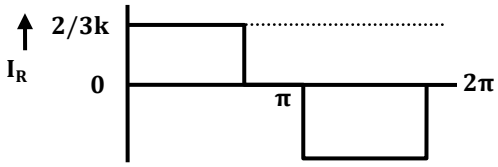

[Ans. B]

54. A diode circuit feeds an ideal inductor as shown in the figure. Given $V_s = 100\sin(\omega t)$ V, where $\omega = 100\pi$ rad/s, and L = 31.83 mH. The initial value of inductor current is zero. Switch S is closed at t = 2.5ms. The peak value of inductor current i_L (in A) in the first cycle is_____

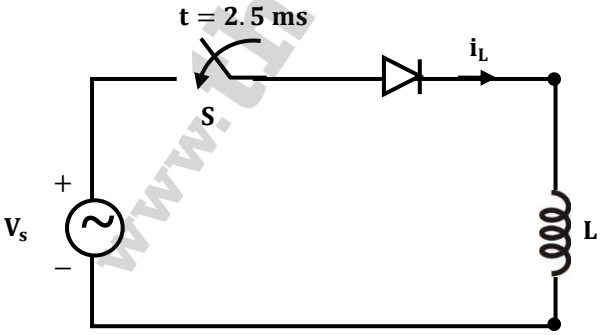

[Ans. *] Range 16.6 to 17.4

www.thegateacademy.com

55. A single-phase voltage source inverter shown in figure is feeding power to a load. The triggering pulses of the devices are also shown in the figure.

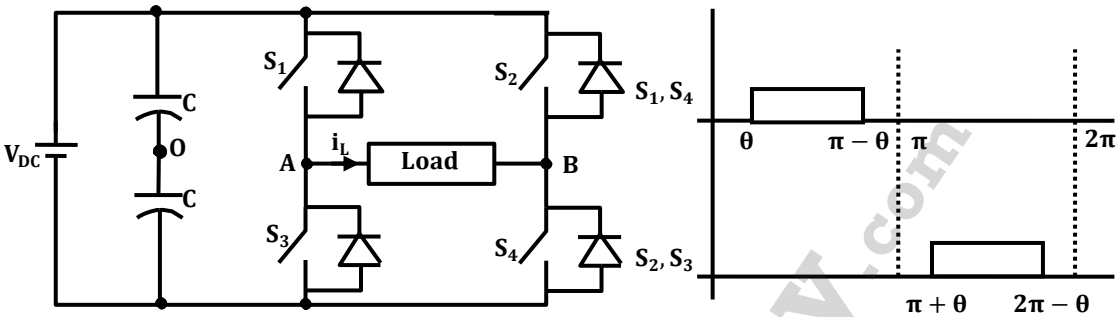

If the load current is sinusoidal and is zero at $0, \pi, 2\pi \ldots\ldots$, the node voltage V_{AO} has the waveform

(A)

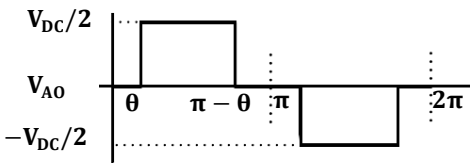

(C)

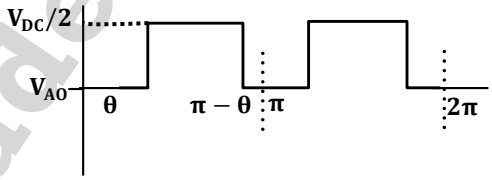

(B)

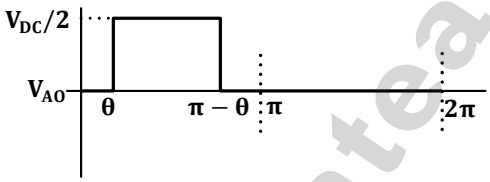

(D)

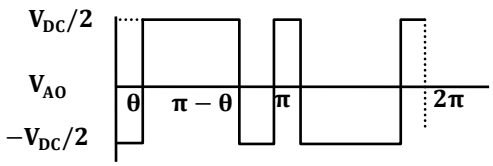

[Ans. D]

General Aptitude (Set – 9)

General Aptitude One Marks Question Q. 56 to Q. 60

56. While trying to collect an envelope from under the table, Mr. X fell down and was losing consciousness.

I II III IV

Which one of the above underlined parts of the sentence is NOT appropriate?

(A) I (B) II (C) III (D) IV

[Ans. D]

57. If she_____ how to calibrate the instrument, she_____ done the experiment.

(A) knows, will have
(B) knew, had
(C) had known, could have
(D) should have known, would have

[Ans. C]

www.thegateacademy.com

58. Choose the word that is opposite in meaning to the word "coherent".
(A) sticky
(B) well-connected
(C) rambling
(D) friendly
[Ans. C]

59. Which number does not belong in the series below?
2, 5, 10, 17, 26, 37, 50, 64
(A) 17 (B) 37 (C) 64 (D) 26
[Ans. C]

60. The table below has question-wise data on the performance of students in an examination. The marks for each question are also listed. There is no negative or partial marking in the examination.

Q.No.	Marks	Answered Correctly	Answered Wrongly	Not Attempted
1	2	21	17	6
2	3	15	27	2
3	2	23	18	3

What is the average of the marks obtained by the class in the examination?
(A) 1.34 (B) 1.74 (C) 3.02 (D) 3.91
[Ans. C]

General Aptitude Two Marks Question Q. 61 to Q. 65

61. A dance programme is scheduled for 10.00 a.m. Some students are participating in the programme and they need to come an hour earlier than the start of the event. These students should be accompanied by a parent. Other students and parents should come in time for the programme. The instruction you think that is appropriate for this is
(A) Students should come at 9.00 a.m. and parents should come at 10.00 a.m.
(B) Participating students should come at 9.00 a.m. accompanied by a parent, and other parents and students should come by 10.00 a.m.
(C) Students who are not participating should come by 10.00 a.m. and they should not bring their parents. Participating students should come at 9.00 a.m.
(D) Participating students should come before 9.00 a.m. Parents who accompany them should come at 9.00 a.m. All others should come at 10.00 a.m.
[Ans. B]

62. By the beginning of the 20th century, several hypotheses were being proposed, suggesting a paradigm shift in our understanding of the universe. However, the clinching evidence was provided by experimental measurements of the position of a star which was directly behind our sun.
Which of the following inference(s) may be drawn from the above passage?
(i) Our understanding of the universe changes based on the positions of stars
(ii) Paradigm shifts usually occur at the beginning of centuries
(iii) Stars are important objects in the universe
(iv) Experimental evidence was important in confirming this paradigm shift
(A) (i), (ii) and (iv)
(B) (iii) only
(C) (i) and (iv)
(D) (iv) only
[Ans. D]

www.thegateacademy.com

63. The Gross Domestic Product (GDP) in Rupees grew at 7% during 2012-2013. For international comparison, the GDP is compared in US Dollars (USD) after conversion based on the market exchange rate. During the period 2012-2013 the exchange rate for the USD increased from Rs. 50/ USD to Rs. 60/ USD. India's GDP in USD during the period 2012-2013

(A) increased by 5 %
(B) decreased by 13%
(C) decreased by 20%
(D) decreased by 11%

[Ans. D]

64. The ratio of male to female students in a college for five years is plotted in the following line graph. If the number of female students in 2011 and 2012 is equal, what is the ratio of male students in 2012 to male students in 2011?

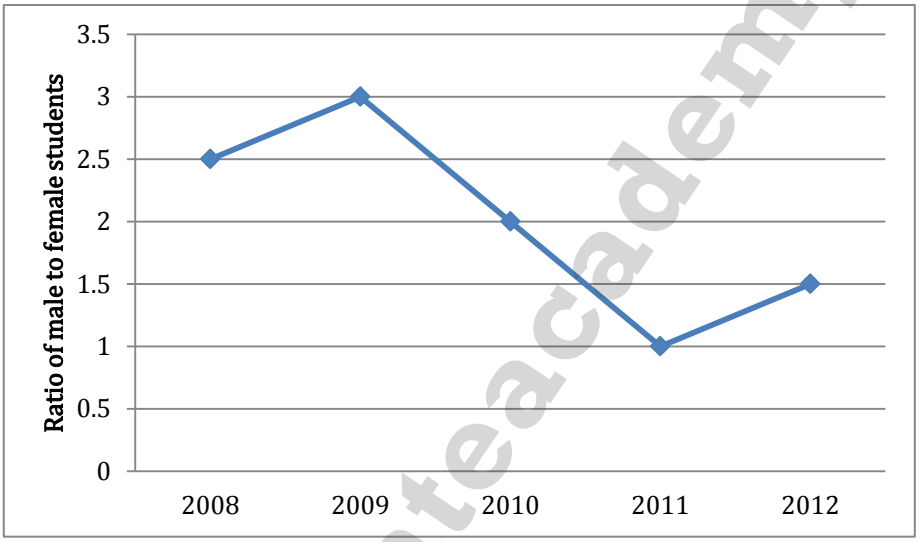

(A) 1:1
(B) 2:1
(C) 1.5:1
(D) 2.5:1

[Ans. C]

65. Consider the equation: $(7526)_8 - (Y)_8 = (4364)_8$, where $(X)_N$ stands for X to the base N. Find Y.

(A) 1634
(B) 1737
(C) 3142
(D) 3162

[Ans. C]

www.thegateacademy.com