# SAMPLE OF THE STUDY MATERIAL

# PART OF CHAPTER 1

# Transformer

## SINGLE PHASE TRANSFORMER (SYNOPSIS):

- No moving parts. Two circuits.
- Electrically isolated, magnetically coupled.
- Transformer is a static device.
- A transformer has no rotating or moving parts.
- A transformer is NOT an energy conversion device.
- There **is** no change in frequency.
- Voltage and current change simultaneously.
- A transformer has two windings.
- Transformers require very little care and maintenance because of their simple, rugged and durable.
- The efficiency of a transformer is high because there are no rotating parts, it is a static device.
- The efficiency of a 5 KVA transformer is of the order of 94-96%.
- The efficiency of a 100 MVA transformer is of the order of 97-99%
- Transformer **is** responsible for the extensive use of a.c. over d.c.

## CONSTRUCTIONAL DETAILS:

- Core: Silicon steel or sheet steel with 4% silicon is used.
- The core plates of a transformer are made of silicon steel or sheet steel.
- The sheets used for core plates contain 4% silicon.
- The sheets are laminated to reduce eddy current losses.
- The sheets are laminated and coated with an oxide to reduce iron losses.
- The thickness of lamination is 0.35 mm for 60 Hz operation.
- The thickness of lamination is 5 mm for 25 Hz operation.
- The core provides a path of low reluctance.
- The relative permeability for the core material is of the order of 1,000.
- For a given value of flux, the primary AT required are less if the reluctance is low.
- A spiral core is assembled using continuous strip of transformer silicon steel wound in the form of a circular or elliptical cylinder.
- In a spiral core transformer higher flux densities can be used.
- A spiral core transformer has Tower loss per Kg. Weight.

### Windings:

- Conventional transformer has two windings.
- The winding which receives electrical energy is called primary winding.
- The winding which delivers electrical energy is called secondary winding.
- Windings are made of High grade copper if the current is low.
- Stranded conductors are used for windings carrying higher currents.
- Additional insulation is provided for line end connections, because during disturbances (switching over voltages and lightning), 80% of the voltage appears across the first 10% of turns from the line end.

- For large power and distribution transformers, an oil-filled tank is necessary for cooling the windings and the core.
- Two types of losses: Core and copper, occur during operation.
- Heat produced is roughly proportional to the volume of the material in which losses occur.
- Heat dissipation is proportional to the surface area of the same material and the tank.
- The surface is CORRUGATED to increase the surface area. Radiators are also used.

### Methods of Cooling:

a) Natural Radiation-------- low voltage and output ratings. (500V, 5 KVA).
b) Oil filled and self cooled--------- large sized transformers. (132 KV, 100 MVA).
c) Forced cooling with air blast------ Transformers with ratings higher than 33 KV and 100 MVA.

### Conservator Tank:

- Due to variations in load and climatic conditions, the oil in oil-filled, self-cooled transformers expands or contracts.
- In the absence of a conservator tank, high pressures are developed which may burst the tank.

### Bushings:

- To provide proper insulation to the output leads to be taken from the transformer tank.
- Porcelain type bushings are used up to 33 KV.
- Condenser type and oil-filled type bushings are used beyond 33 KV.

### Breather:

- Absorption of oil and dust by oil must be prevented.
- To prevent moisture and dust from entering the-conservator tank oil, breather is provided.

### Types of Transformer:

- Core type: Copper windings surround core.
- Shell type: Iron core surrounds the copper windings.
- To reduce the eddy currents induced in the core, thin laminations are used.
- To reduce the hysteresis loss, heat treated grain oriented silicon steel laminations are used.
- Generally, distribution transformers are of the Core type.

**Core-Type Transformers:** Two types

i) Core-type ii) Distributed core type.

- In a simple core-type transformer, there is a single magnetic circuit,
- The vertical members of the core are called limbs, and the horizontal members are called yokes
- Each limb of a core-type transformer carries a half of primary windings and a half of secondary windings.
- In a distributed-core type transformer, the windings are on the central limb.
- The number of parallel magnetic circuits in a distributed core type transformer is equal to the number of parts of distributed core.
- Because of the presence of insulating materials, the core area gets reduced about 10%.
- Iron factor is the ratio of active area of core and gross area of core and its value is approximately 0.9.

### Shell-Type Transformers:

- A shell type transformer has two magnetic circuits parallel

- To reduce the mechanical vibrations and humming noise, the transformers are provided with good bracing.
- Humming noise is due to magnetostriation, of the core due to reversal of flux.

## Principle of Operation:

- Transformer works on the principle of mutual induction.
- The voltage per turn of the primary and secondary windings is the same since the same mutual flux cuts both the windings, if both the windings are identical in cross-section.
- The ratio of the induced emf's = Ratio of the turns.
- Since $E_1 = V_1$ and $E_2 \cong V_2$ $\therefore V_1/V_2 = T_1/T_2$
- In a loaded transformer, the primary draws a current so that mutual flux is maintained constant.
- Since no-load primary AT are very small compared to full-load AT, $I_1T_1 = I_2T_2$.
- $I_1/I_2 = T_2/T_1 = V_2/V_1$ i.e, $V_1I_1 = V_2I_2$. Primary VA = Secondary VA.

## E.m.f Equation:

Voltage applied to the primary and the magnetic flux set up in the core are assumed to be sinusoidal.

If $\phi = \phi_m \sin \omega t$ ($\omega = 2\pi f$)

$$e_1 = - T_1 (d\phi/dt) = -T_1\, \omega\, \phi_m\, \omega t = T_1 \omega\, \phi_m \sin(\omega t - 90^o)$$

$$e_2 = - T_2 (d\phi/dt) = -T_2\, \omega\, \phi_m\, \omega t = T_2 \omega \phi_m \sin(\omega t - 90^o)$$

Similarly

$$E_{1max} = - T_1 \omega\, \phi_m = 2\pi f\, T_1\, \phi_m$$

$$E_1 = (1\sqrt{2})\, E_{1max} = \sqrt{2}\, 2\pi f\, T_1\, \phi_m = 4.44\, f\, T_1\, \phi_m$$

Similarly $E_2 = 4.44 f T_2\, \phi_m$

$E_1$ and $E_2$ are in phase and lag behind $\phi_m$ by an angle of $90^o$

## Losses and Efficiency:

- Since a transformer is a static device, there are no mechanical losses.
- There will be only magnetic (hysteresis and eddy current losses) and copper losses due to the flow of current through the windings.
- Hysteresis loss is proportional to the maximum value of flux density)raised to the power of and the supply frequency **i.e., $B_m^{1.6}f.t$**
- The eddy current losses are proportional to the square of the maxim flux density and the square of the frequency and the thickness of laminations. **i.e., $B_m^2 f^2.t$**
- The flow of current through the windings gives rise to the copper losses, viz., $I_1^2\, r_1$ and $I_2^2\, r_2$.
- The magnetic losses are present as long as the primary is energized.
- Since the no – load current is only of the order of 5% of the rated or full load current, the no load copper loss in the primary winding is neglected. So, the no load input to a transformer is taken as the magnetic loss or the iron or the core loss. It is assumed to be same under all operating conditions, right from no load to full load (or even slight over load). It is denoted as $P_i$.
- The copper losses vary with the value of the secondary (and hence the Primary) current. The copper loss corresponding to the rated value of the current is called the Full load copper loss. We shall designate it as $P_c$.
- The efficiency (sometimes called the commercial efficiency) of a transformer is the ratio of the power output and power input, both expressed in the same units (Watts, Kilowatts or Megawatts).

- Let be the KVA of the transformer, x be the fraction of the full load at which the transformer is working ($0 \leq x \leq 1.0$ usually), and cos $\phi$ be the power factor of the load. Then the efficiency is given by $\eta = x\,S\cos\phi/[x\,S\cos\phi + P_{1\,+x}{}^{2}\,P_c]$
- For a given load, the power factor is constant. So, by differentiating 'η' with repect to 'x' and setting it to zero, we obtain the condition for the maximum efficiency as Variable copper losses = constant iron losses**, i.e., $x^2$ Pc = pi**
- At maximum efficiency operation, the ;total losses = $2\,P_i = 2x^2\,P_c$, since $x = \sqrt{(P_i/P_c)}$

**Example:**

A 100 kVA, 50 Hz, 440 V/11,000 V single phase transformer has an efficiency of 98.5% when supplying full – load current at 0.8 p.f. and an efficiency of 99%, when supplying half full – load current at unity p.f. Find the iron losses and the copper losses corresponding to full – load current. At what value of load current will the maximum efficiency be attained?

**Solution:**

Let the copper at full load = $W_c$. kW
and the iron loss = $W_i$. kW
Then,

$$= \frac{100 \times 0.8}{100 \times 0.8 + W_c + W_i} = 0.985 \qquad \ldots\ldots\ldots(1)$$

and $$\frac{50\times1}{50\times1+\left(\frac{1}{2}\right)^2 W_c+W_i} = 0.990 \qquad \ldots\ldots\ldots(2)$$

Rearranging equations (1) and (2), we get

$$0.99\,W_c + 3.96\,W_i = 2 \qquad \ldots\ldots\ldots\ldots(3)$$

$$0.985\,W_c + 0.985\,W_i = 1.2 \qquad \ldots\ldots\ldots\ldots(4)$$

Solving equations (3) and (4), we get,
$W_c = 0.9510$ kW = 951 watts,
$W_i = 0.2673$ kW = 267.3 watts
Let the maximum efficiency occur at a fraction of 'x' times the full – load.
Then $(x^2)\,W_c = W_i$
$x^2 \times 951 = 267.3$

$$x^2 = \frac{267.3}{951} = 0.2810$$

$x = 0.5300$
∴ The maximum efficiency occurs at a load of (0.53 × 100) = 53 kVA.
The full load current on the primary side

$$= \frac{100 \times 1000}{440} = 227\,A$$

Hence, the current at maximum efficiency
$= 227 \times 0.53 = 120$ A

## Equivalent Circuit:

* By making use of the equivalent circuit, the performance indices such as efficiency, voltage regulation etc., can be determined

### Development of equivalent circuit:

I) (a) The primary and secondary windings are idealized. Thus, the resistance $r_1$ and the leakage reactance $x_1$ of the primary winding are connected externally such that they carry the primary current.
(b) To take care of the magnetizing component of the current, a pure inductive reactance $x_0$ is connected across the primary winding directly.
(c) To take care of the core losses, a pure resistance $r_0$ is connected across the primary winding directly.

Now, the idealized primary winding is the seat of the induced e.m.f., $E_1$, as shown in the figure below.

$I_1$……….. $r_1$

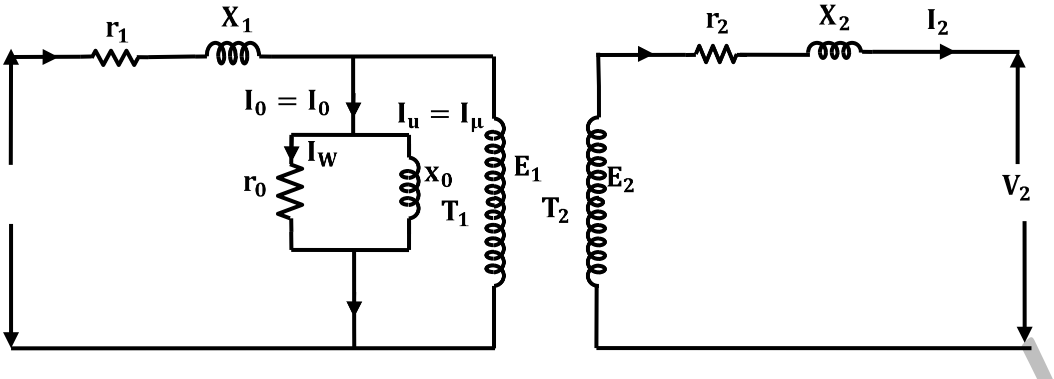

(d) Similarly, the secondary winding is idealized as shown in the figure.

$r_2$ and $x_2$ and are the resistance and leakage reactance of the secondary winding, respectively.

II) The actual secondary winding of $T_2$ turns is replaced by an equivalent winding of turns $T_1$, such that the electrical characteristics remain unaltered. Let $r_1^2$ and $x_2^1$ be the resistance and leakage reactance of the equivalent secondary winding. Let $E_2^1$ be the voltage induced in the secondary

Then ⟹ $E_2/E_1 = V_2/V_1 = T_2/T_1 = I_1/I_2$

Let $I_2$ and $V_2$ be the equivalent secondary current and voltage, respectively.

The copper losses in them, i.e., actual and the equivalent secondaries must be the same.

i.e., $I_2^{2\prime} r_2 = (I_2')^2 r_2'$ so that $r_2' = (I_2/I_2')^2 r_2 = (I_2/I_1)^2 r_2 = (T_1/T_2)^2 r_2$

Again, the p.u. reactance voltage drops are to be the same.

i.e., $(I_2x_2/E_2) = (I_2'x_2'/E_2')$ so that $x_2' = (I_2/I_2')(E_2'/E_2)x_2 = (T_1/T_2)(T_1/T_2)x_2 = x_2(T_1/T_2)^2$

Thus, the equivalent resistance of the secondary winding referred to the primary,

$r_2' = r_2(T_1/T_2)^2$. Similarly, $x_2' = x_2(T_1/T_2)^2$

III) Since the primary and secondary idealized windings are the seats of the induced e.m.f's $E_1$ and $E_2^1$ satisfying the relation $(E_1/E_2') = (T_1/T_2) – 1$, the winding can be dispense with and circuits representing the two sides can be joined together, as shown in the figure below.

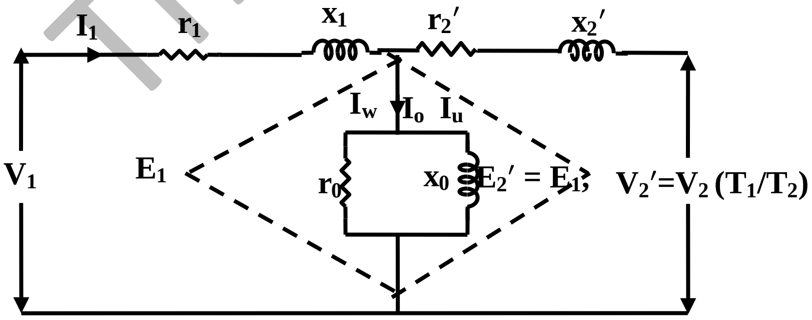

The above circuit is the EXACT equivalent circuit of the transformer referred to the primary side.

In a similar manner, the equivalent circuit referred to the secondary side can be obtained. (Actually, the roles of the primary and secondary windings are to be interchanged.

So, it is preferable to say that the equivalent circuit is referred to the H.V. side or L.V. side)

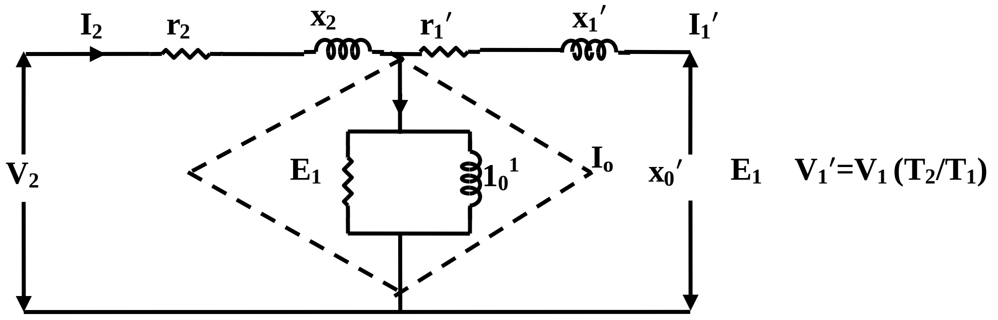

Here, $r_0' = r_0\,(T_2/T_1)^2$; $x_0' = x_0(T_2/T_1)^2$. $r_1' = r_1\,(T_2/T_1)^2$; $x_1' = x_1(T_2/T_1)^2$.

## Approximate Equivalent Circuit:

In a well designed transformer, the change in the mutual flux from no – load to full – load is so small that it can be assumed to be a constant. So $I_\omega$ and $I_\mu$ can be assumed to be more or less constant. Also$|E_1| \approx |V_1|$So, the magnetizing branch ($r_o \,||\, x_o$) can be connected directly across $V_1$, as shown in figure below.

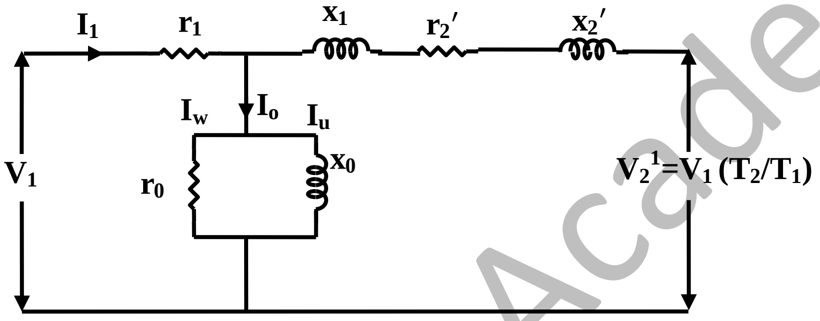

This is called the approximate equivalent circuit.

- In the approximate equivalent circuit, the voltage drop due to the flow of $I_o$ through $r_1$ and $x_1$ is neglected. This is justified since $I_o$ is very small compared to the rated full load current.
- The calculations are very much simplified with negligible error introduced.
- The approximate equivalent circuit can further be simplified as ($r_1$ & $r_2^1$) are in series and ($x_1$ & $x_2^1$) are in series, as shown in the figure below.

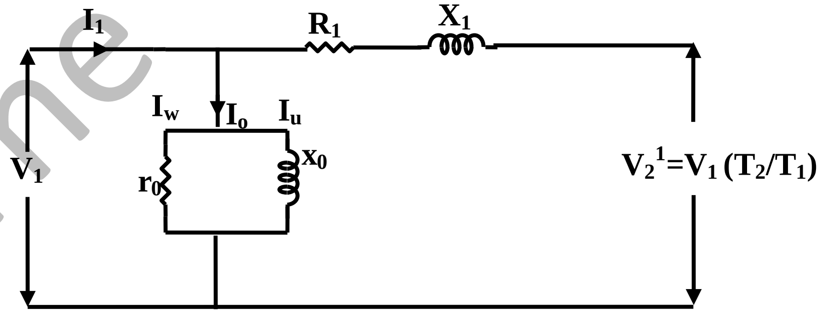

Here, $R_1 = (r_1 + r_2^1)$, is called the equivalent resistance of the transformer referred to the primary side.

Similarly, $X_1 = (x_1 + x_2^1)$, is called the equivalent reactance of the transformer referred to the primary side.

Again, $R_1 = r_1 + r_2^1 = r_1 + r_2\,(T_1/T_2)^2$ so that $R_1\,(T_2/T_1)^2 = r_1\,(T_2/T_1)^2 + r_2$ i.e., $R_2 = r_1^1 + r_2$

Where $R_2$ is the equivalent resistance of the transformer referred to the secondary side, while $r_1^1$ is the Similarly, $X_2 = x_1^1 + x_2$, is the equivalent reactance of the transformer referred to the secondary side. Now, the approximate equivalent circuit referred to the secondary side can be drawn as shown in the figure below.

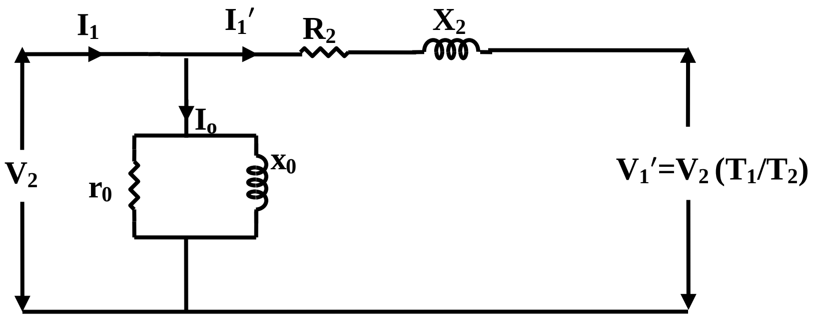

**NOTE:**

a) In referring the equivalent circuit from one side to the other side, the resistance, reactance and impedance get multiplied by the SQUARE of the turns ratio; the voltage by the turns ratio.
b) The resistance and reactance of the winding and the equivalent values of the other are of the same order of magnitude.
c) The h.v winding will have higher impedance and the 1.v winding the lower impedance.

[Thus, if resistances are 0.5Ω and 0.0055Ω for a transformer with a turns ratio equal to 10, then if $r_1 = 0.5$; $r_2^1 = 0.0055(10)^2 = 0.55\Omega$. (The transformer is a step – down transformer). on the other hand, if $r_1 = 0.005$ $r_2^1 = 0.5(1/10)^2 = 0.005\Omega$(The transformer is a step – up transformer].

## Copper losses in the transformer:

Cu. loss = $I_1^2 r_1 + I_2^2 r_2 = I_1^2 [r_1 + (I_2/I_1)^2 r_2] = I_1^2 [r_1 + (T_1/T_2)^2 r_2] = I_1^2 [r_1 + r_2^1] = I_1^2 R_1$.

Again, $I_1^2 R_1 = [(I_2 T_2/T_1)]^2 R_1 = I_2^2[(T_2/T_1)^2 R_1] = I_2^2 R_2$.

## Phasor Diagram:

The phasor diagram of a single phase transformer may be drawn as follows:

Let us take the secondary voltage $V_2$ as the reference phasor. i.e., $V_2 = V_2, \angle 0$. Let the p.f. of the load be $\cos ø_2$. (lagging) Then, secondary current, $I_2 = I_2 \angle -ø_2$. Now, the secondary e.m.f $E_2 = V_2 + I_2 \angle -ø\,(r_2 + j\,x_2)$ Now, let us assume that the transformer is a step – down transformer, so that the transformer is a step – down transformer, so that $E_1 > E_2$. Also, since $E_1$ and $E_2$ are in phase, $E_2$ is extended to give $E_1 = E_2\,(T_1/T_2)$. Now, $I_\mu$ leads $E_1$ and $E_2$ by 90°. Now, $I_\mu$ is drawn in phse with $ø_m$ and $I_w$ leading $ø_m$ by 90°.

$$I_0 = I_\mu + I_w$$

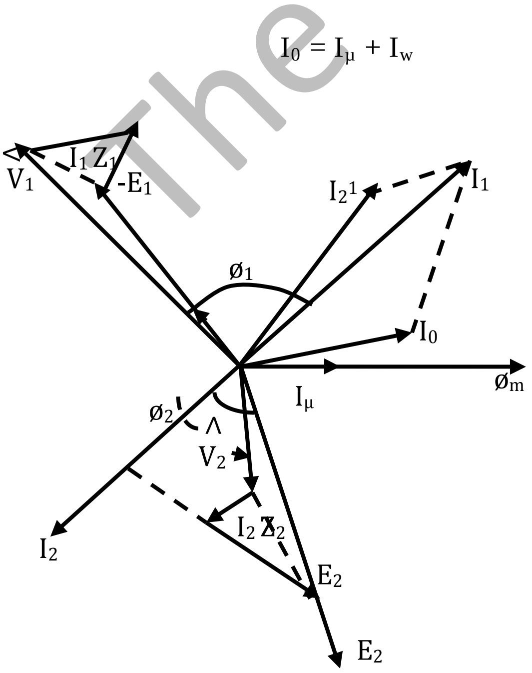

The secondary current referred to the primary side, $I_2^1 = I_2 (T_2/T_1)$. Now; $I_1 = (-I_2^1) + I_0$ and $V_1 =(-E_1) + I_1 (r_1 + jx_1)$. The angle between $V_1$ and $I_1$ is the p.f. angle of the primary side, i.e., the primary p.f. = $\cos\phi_1$.

**NOTE:**

a) With a lagging p.f.(secondary) load, $\phi_1 > \phi_2$ that $\cos\phi_1 < \cos\phi_2$.
b) If the phasor diagram is drawn to scale, the angle $\delta$ between $-E_1$ and $V_1$ may be of the order of $2^o$ or $3^o$.
c) If the transformation ratio is high, the phasor diagram can not be drawn to scale correctly, So, the results obtained will be erroneous overcome this difficulty, the phasor diagrams are drawn making use of the equivalent values (obtained from the equivalent circuit).